Graphite Strain Sensor Datasheet

Main Features

- Strain gauge that's easy to use replace or repair
- Low cost/low tech
- Small size (< 10 cm2)
- Low power consumption (3,3V –5V)
- Ultra-light (10g)
- Large range of baseline resistivity choices depending on the pencil tone used (2H, HB, B, 2B, 4B, 6B, 8B)

Dimensions and setup

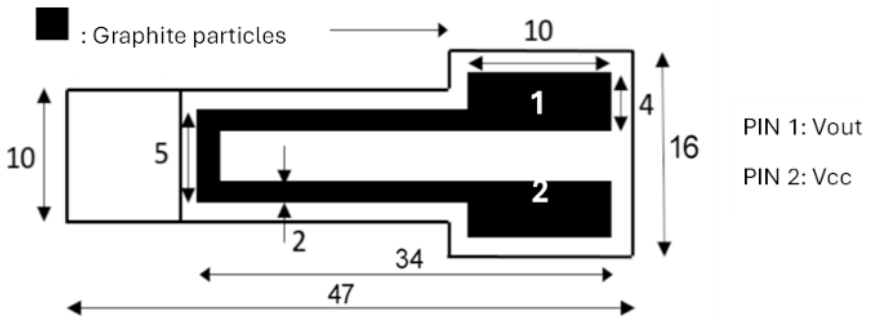

Electrical Specifications

Parameter	Symbol	Min	Typical	Max	Unity
Supply Voltage	VCC	-	5	5,25	Volt
Analog Output	Vout	0	-	5	Volt
Temperature	T	10	-	30	C
Humidity		0	-	80	%
Paper thickness	e	0,15	0,2	0,3	mm
Pencil Tone		8B	-	2H	

Pencil Tone	Minimum	Typical	Maximum
6B (Softest)	80kΩ	90 MΩ	130 kΩ
3B	300kΩ	500kΩ	1 MΩ
HB (Hardest)	50.0 MΩ	200.0 MΩ	450.0 MΩ

Physics behind the Graphite Sensor

This sensor basically measures the number of available conductive pathways in a thin film of fine graphite particles also known as pencil deposited onto the porous cellulose fibers of the paper. The electrical resistance of this graphite sensor is entirely dependent on the microscopic distances and contact quality between these graphite particles. These tiny gaps dictate the number of available tunnelling junctions that electrons can use to cross the network. As established in the foundational study, *Pencil Drawn Strain Gauges and Chemiresistors on Paper (Lin et al., 2014)* , applying mechanical deformation to the paper substrate directly alters this delicate micro-structure.

Tensile deflections stretch de sensor pulling graphite particles further apart increasing the gap in between and disconnecting conduction pathways increasing electrical resistance. On the other hand, compressive deflection pushes particles together facilitating better conduction through the network, which decreases the electrical resistance.

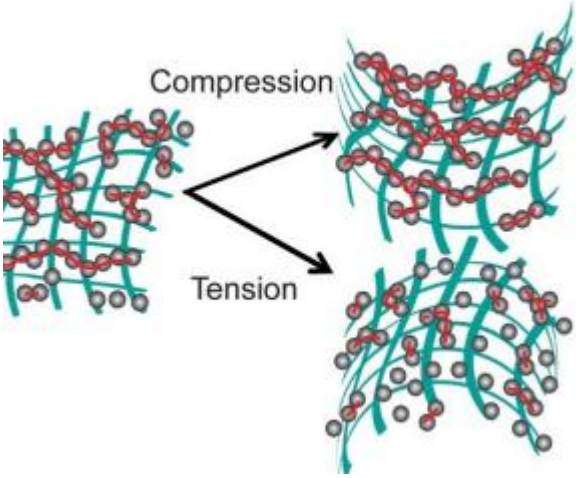

The Impact of Pencil Tone

The choice of the (hard or soft) fundamentally changes the sensor's sensitivity, too soft creates a dense, highly saturated conductive network with lots of pathways that will be weakly disrupted by mechanical deformation. On the other hand, harder pencils contain more clay and less graphite, creating lighter traces less conductive and with the graphite particles much more spaced, microscopic changes in the distance between particles during tension or compression will cleanly break or form these junctions.

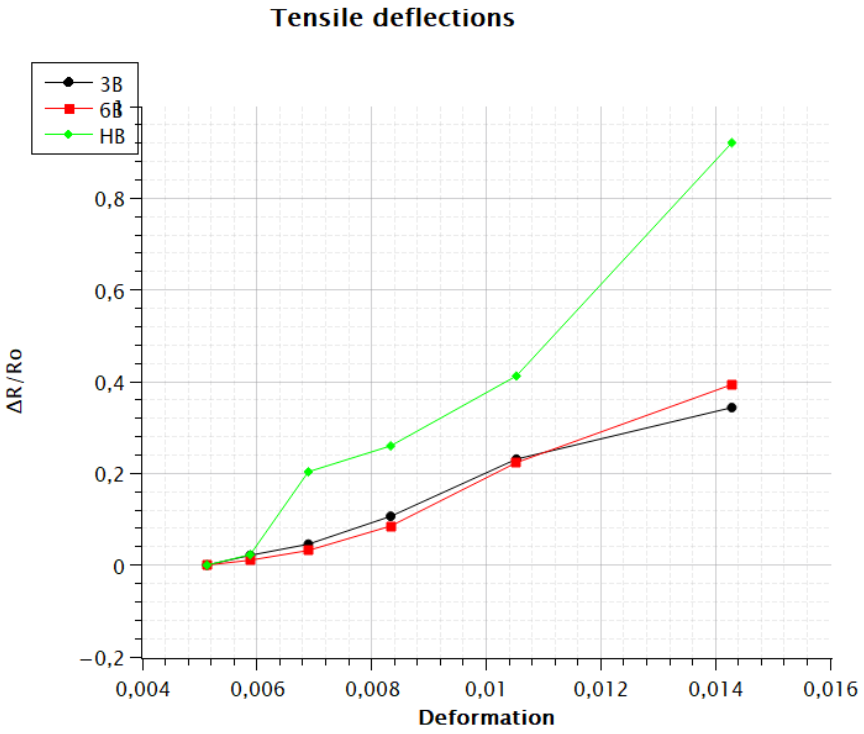

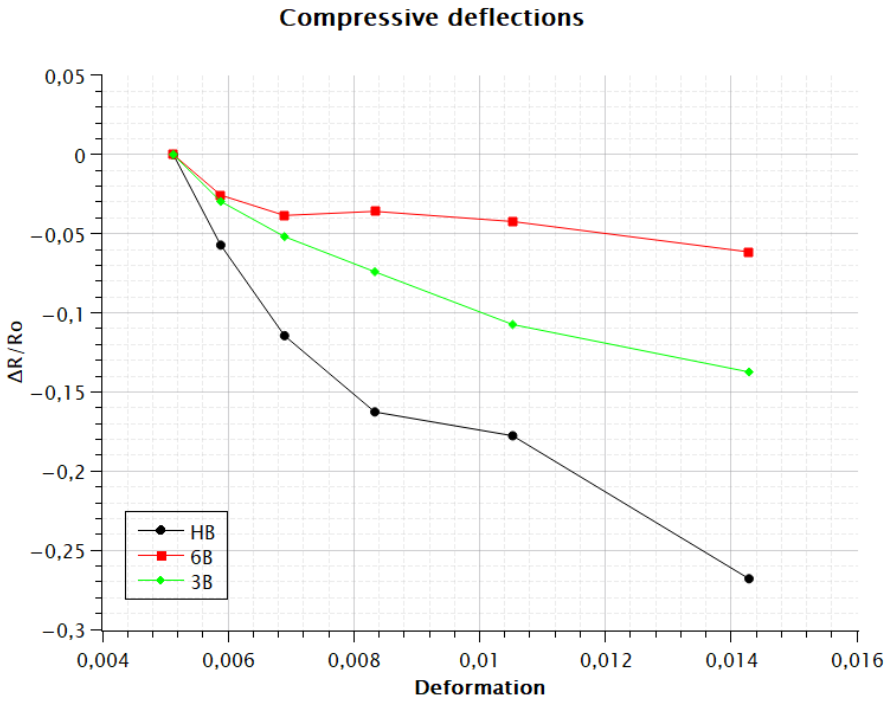

The plotted graphs demonstrate that the sensor's behaviour is coherent with the theory of current available pathways: tensile strain increases resistance by pulling graphite particles apart, whereas compressive strain lowers resistance by pushing them together. Additionally, the data clearly shows that harder pencils like HB are substantially more sensitive than softer 6B pencils.

Typical Application

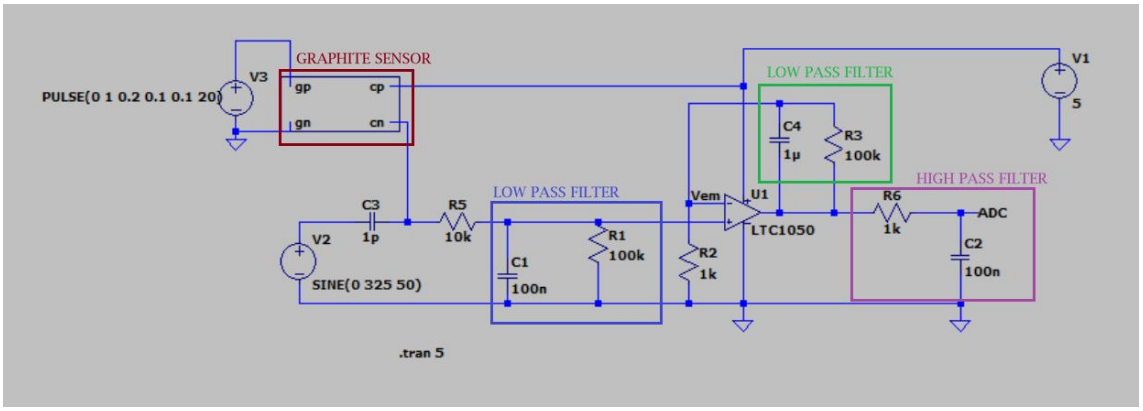

In order to optimize the performance of the sensor, a circuit consisting of three filters is recommended.

- Activ low-pass filter around R3 and C4 with cutoff frequency of 1.6 Hz that filters the frequency generated by the power grid (50 Hz).
- Input: Passive low-pass filter around R1 and C1 with cutoff frequency of 16 Hz that filters out the current noise from the input.
- Output: Passive low-pass filter around R6 and C2 with cutoff frequency of 1.6 kHz that filters out the noise from within the circuit.

Other information to keep in mind is that the R2 resistance is a digital potentiometer (MCP41050) to be able to apply a dynamic adjustment of the amplifier's gain to suit the specific base resistance of the chosen pencil type. Furthermore, the operational amplifier LTC1050 will be used in our circuit, which has properties such as handling low input currents and low voltage offset, ideal for our application.

The resistance value can be determined using the following formula:

$$R_{sensor} = R_1 \left(1 + \frac{R_3}{R_{variable}}\right) \frac{V_{cc}}{V_{adc}} - R_1 - R_5$$